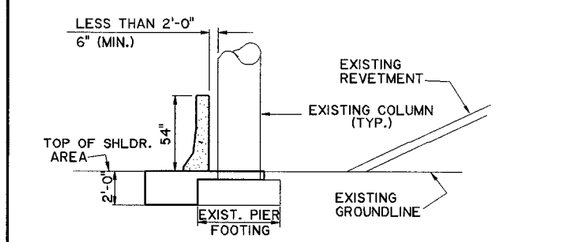

NEW BARRIER FOOTING SHALL BE COPED TO FIT THE EXIST. PIER FOOTING

SECTION A - A

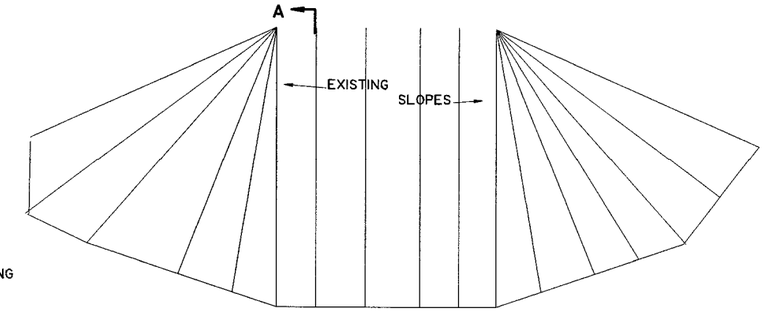

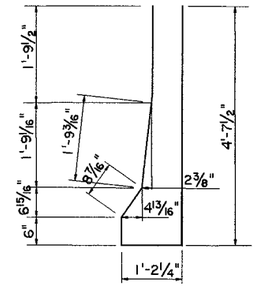

704
(5¼" ϕ PIN)

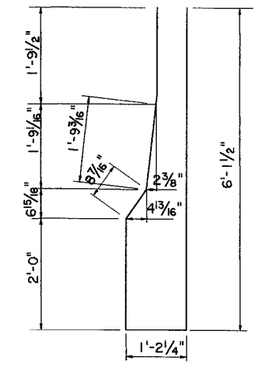

703
(5¼" ϕ PIN)

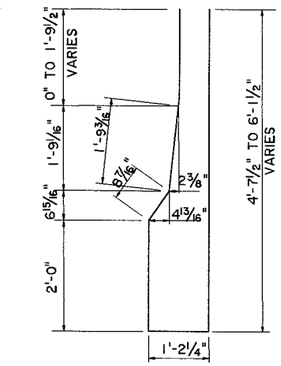

⊕ 705
(5¼" ϕ PIN)

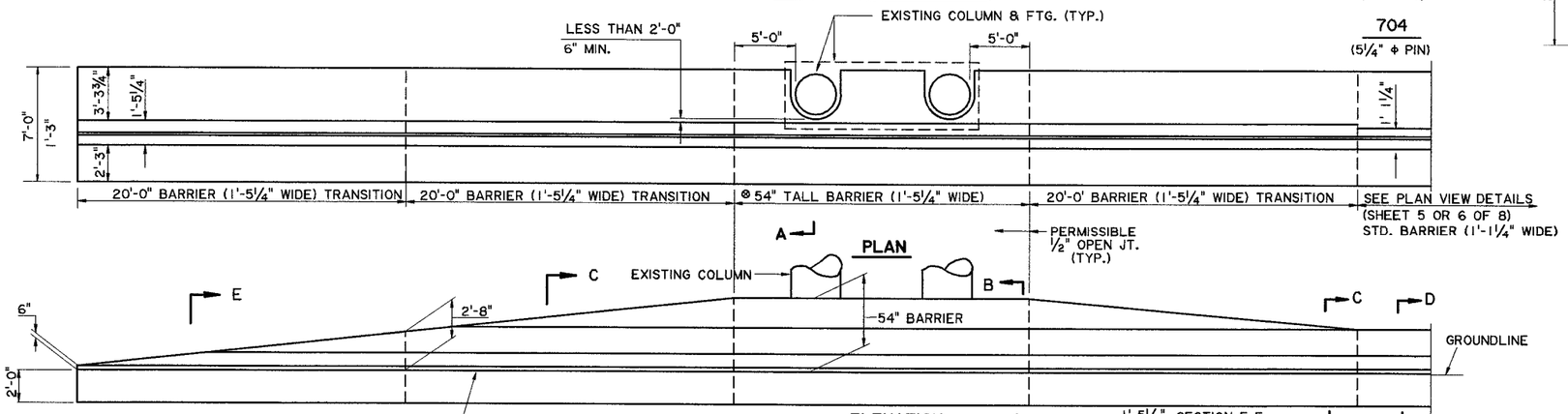

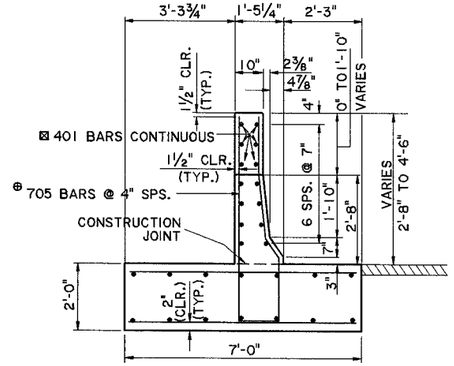

SECTION C-C @ TRANSITION BARRIER (2'-8" TO 4'-6")

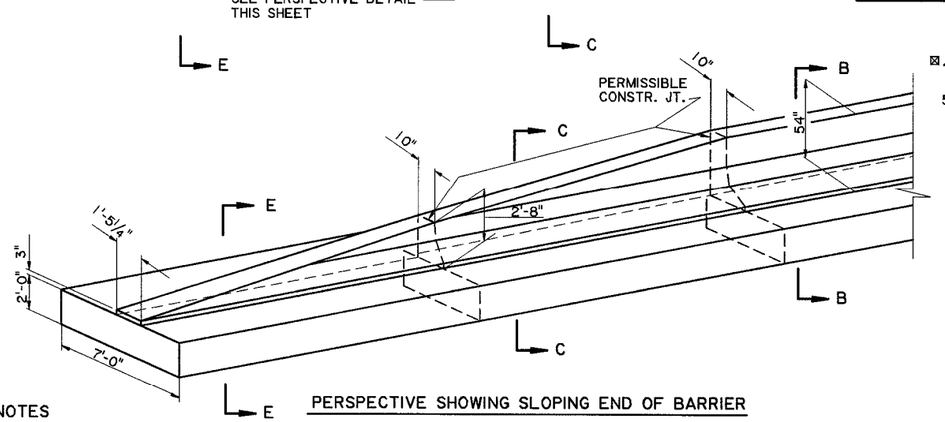

PERSPECTIVE SHOWING SLOPING END OF BARRIER

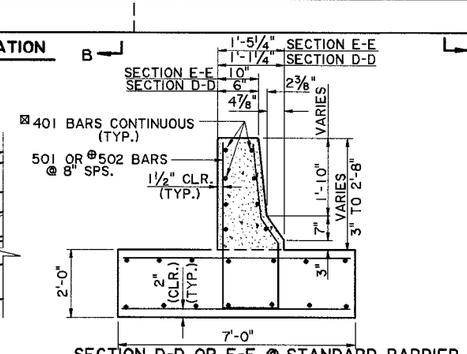

SECTION D-D OR E-E @ STANDARD BARRIER OR TRANSITION (2'-8" TO 0'-3")

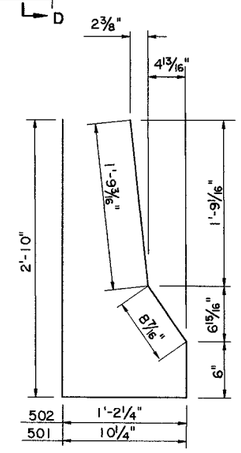

501 & 502 ⊕
(2½" ϕ PIN)
(502 BAR DIMENSIONS VARY)

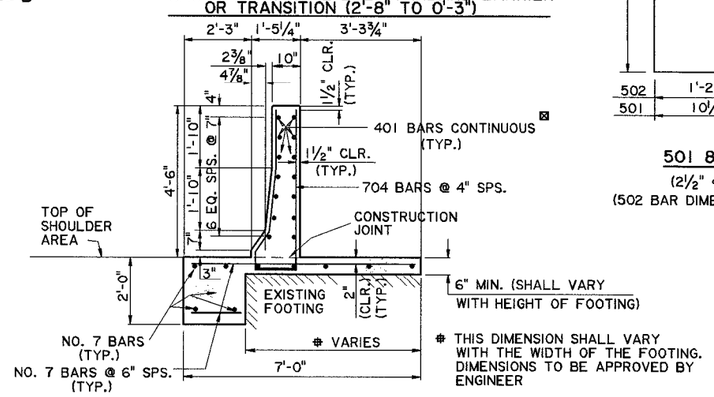

THIS DIMENSION SHALL VARY WITH THE WIDTH OF THE FOOTING. DIMENSIONS TO BE APPROVED BY ENGINEER

BARRIER RAILING SECTION AT EXISTING COLUMN & FOOTING

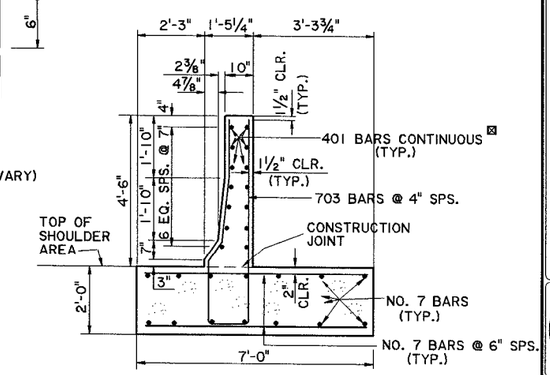

SECTION B-B @ 4'-6" BARRIER

NOTES

EXISTING SLOPE SHOWN IS FOR ILLUSTRATION ONLY. (SLOPES VARY AT EACH LOCATION)

⊗ LENGTH OF 54" TALL BARRIER TO BE DETERMINED BY THE LENGTH OF THE OBJECT TO BE PROTECTED

½" OPEN JOINTS TO BE AT 20'-0" MAX. CTRS.

TRAILING END SHOWN IS FOR USE WITH THE FILL SECTIONS.

FOR TRAILING END ON CUT SECTIONS SEE SHEET 5 OF 8.

SEE SHEET 5 OF 8 FOR OTHER PIER PROTECTION SYSTEM NOTES.

REINFORCING STEEL BAR DETAILS THAT ARE SHOWN ARE FOR FABRICATION. STRAIGHT REBAR DETAILS NOT SHOWN AND ONLY THE SIZE IS SHOWN IN THE SECTIONS.

⊕ THESE REBAR DIMENSIONS VARY AND SHALL BE ADJUSTED & FABRICATED TO FIT IN THE TRANSITION AREA.

THIS STANDARD PLAN SHALL BE USED IN CONJUNCTION WITH STANDARD PLAN GR-200

SEE STANDARD DETAIL BR-01 FOR FURTHER STD. BARRIER AND REINFORCING DETAIL INFORMATION.

⊠ 401 BAR WILL TERMINATE IN TRANSITION SECTION WITH 1½" REQUIRED BAR CLEARANCE

SHEET NUMBER	
PARISH	
FEDERAL PROJECT	
STATE PROJECT	
DESIGNED	
CHECKED	
DETAILED	G. GRASS
CHECKED	P. FOSSIER
DATE	MAY, 2001
SHEET	8 OF 8
APPROVED	
BY	
REVISION DESCRIPTION	
DATE	
APPROVED BY CHIEF ENGINEER:	Original Signed by Chief Engineer
DATE:	6/4/01

HIGHWAY GUARD RAILS
PIER PROTECTION SYSTEM
SELF-SUPPORTING BARRIER
(CUT & FILL SECTION)

STANDARD PLAN GR-201

BRIDGE AND STRUCTURAL DESIGN