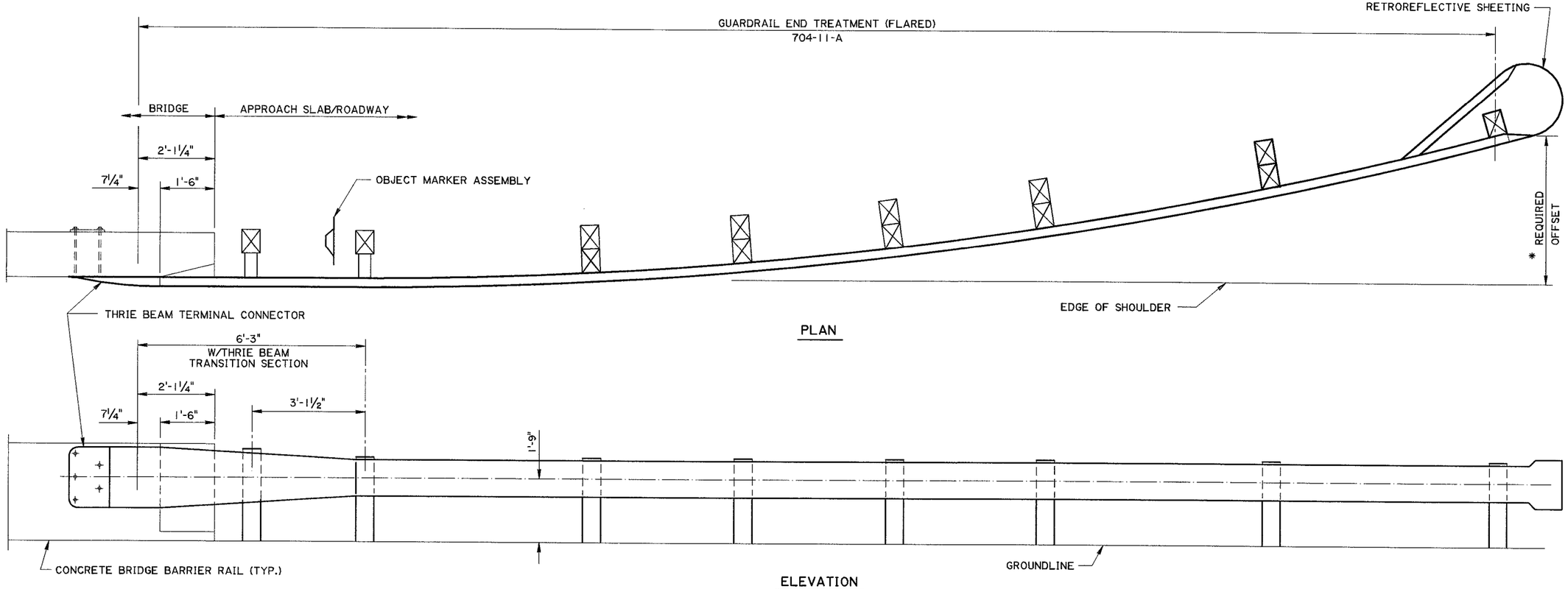

PLAN

ELEVATION

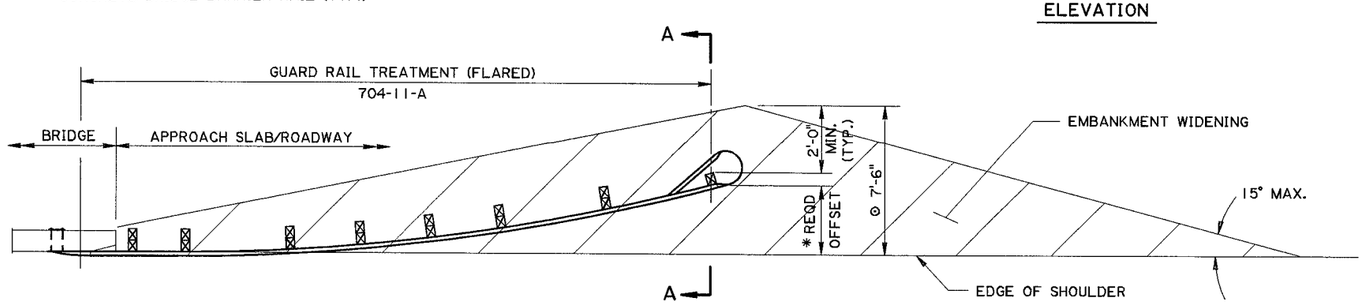

TYPICAL PLAN FOR EMBANKMENT WIDENING

(TYPICAL FOR EACH END OF BRIDGE)

NOTES:

1) FOR FURTHER GUARD RAIL DETAILS AND INFORMATION, SEE STANDARD PLAN GR-200.
2) FOR CONCRETE BRIDGE BARRIER TRANSITION DETAILS, SEE STANDARD DETAIL BR-04A OR BR-04B.
3) GUARD RAIL SHALL BE PAID FOR UNDER: 704-11-A , GUARD RAIL END TREATMENT, (FLARED) PER EACH.

   OBJECT MARKER SHALL BE PAID FOR UNDER: ITEM 729-16, OBJECT MARKER ASSEMBLY, PER EACH.

   THE QUANTITY FOR THE EMBANKMENT WIDENING AT THE BRIDGE ENDS SHALL BE INCLUDED IN THE EMBANKMENT WIDENING QUANTITY FOR THE ROADWAY.
4) THIS MINIMUM LENGTH GUARD RAIL DETAIL WILL BE USED ONLY WHEN THE STANDARD GUARD RAIL DETAILS, STD. PLAN GR-203A CANNOT BE USED DUE TO SPECIAL SITE CONDITIONS.

* 5) USE REQUIRED OFFSET AS PER GUARD RAIL END TREATMENT

⊙ 6) EMBANKMENT WIDENING WIDTH BASED ON 4' GUARD RAIL END TREATMENT OFFSET

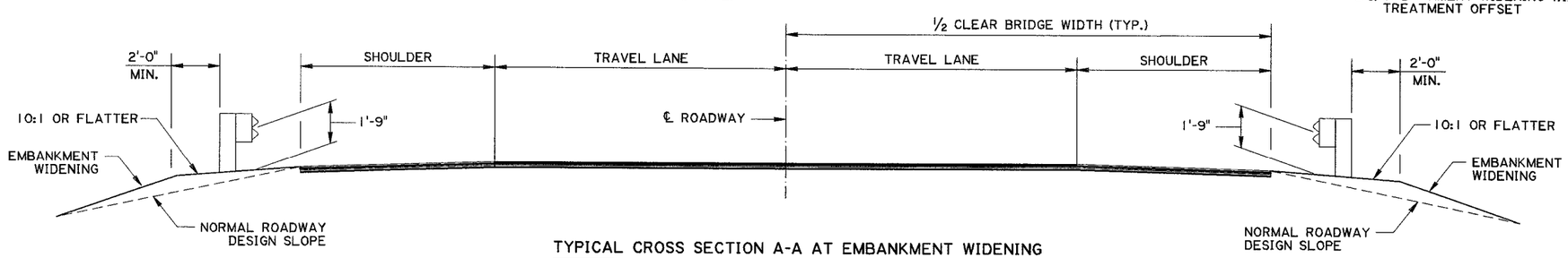

TYPICAL CROSS SECTION A-A AT EMBANKMENT WIDENING

SHEET NUMBER

PARISH | FEDERAL PROJECT | STATE PROJECT

DESIGNED / CHECKED
DETAILED J. BENTON
CHECKED P. FOSSIER
DATE MAY, 2001
SHEET 1 OF 1

REVISION DESCRIPTION | BY | APPROVED | DATE

APPROVED BY CHIEF ENGINEER: *Original Signed by Chief Engineer* DATE: 6/4/01

OFF-SYSTEM HIGHWAY GUARD RAIL
RL-1, RL-2, RL-3, UL-1, & UL-2
CLASS HIGHWAY
MINIMUM LENGTH

STANDARD PLAN GR-203 B

BRIDGE AND STRUCTURAL DESIGN