NOTE: MINIMUM CONCRETE COVER SHALL BE 75 mm FOR THE RETAINING SIDE OF THE WALL AND FOR THE FOOTING, AND 50 mm FOR THE OPEN SIDE OF THE WALL.

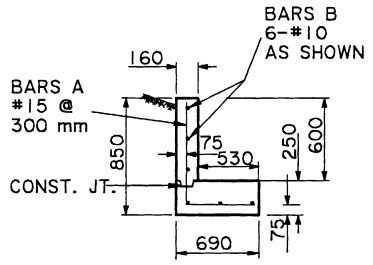

TYPE L0.6

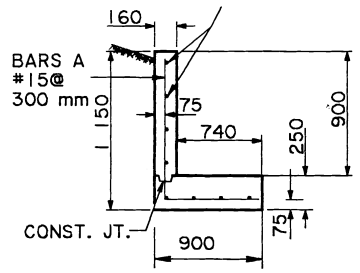

TYPE L0.9

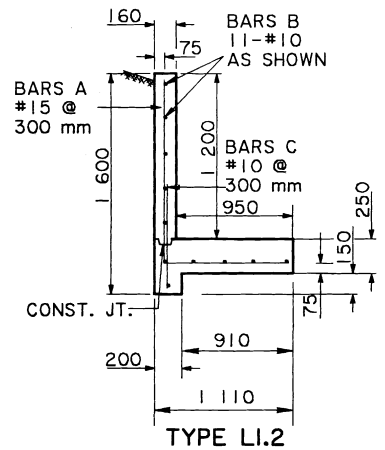

TYPE L1.2

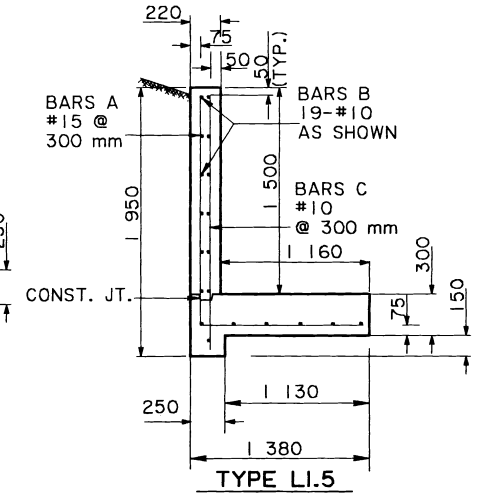

TYPE L1.5

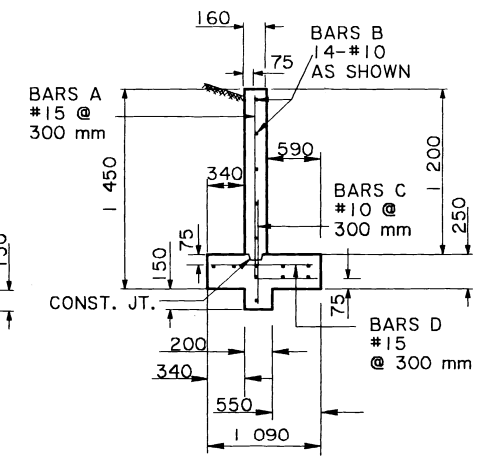

TYPE T1.2

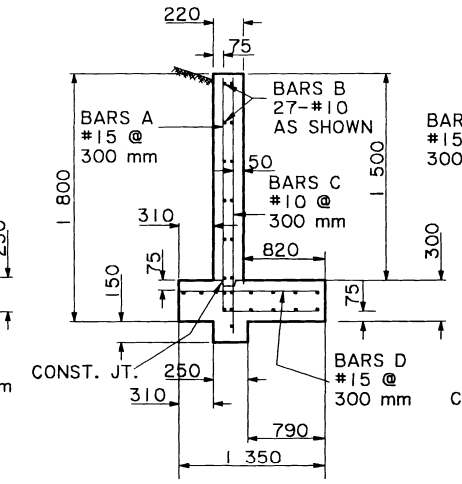

TYPE T1.5

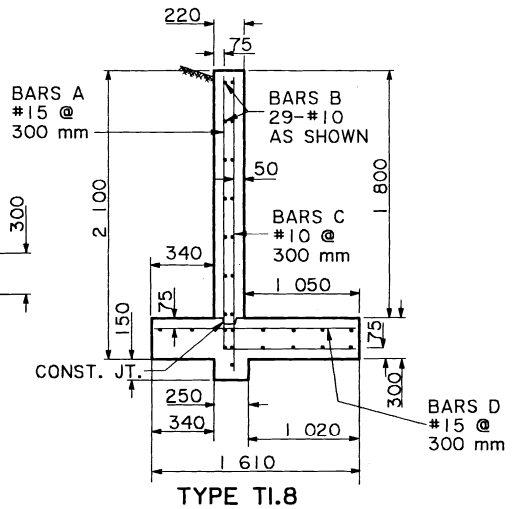

TYPE T1.8

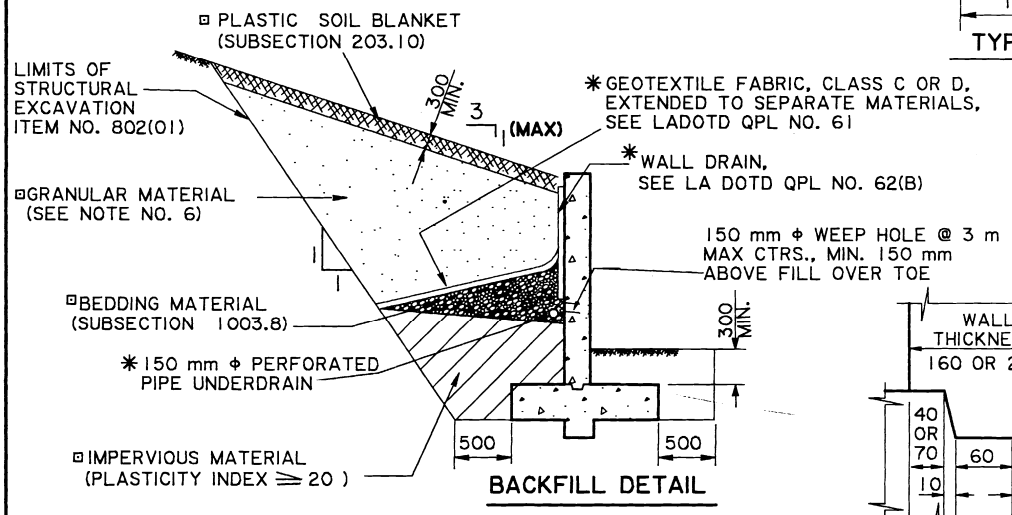

BACKFILL DETAIL

NO DIRECT PAY
SEE NOTE NO. 10

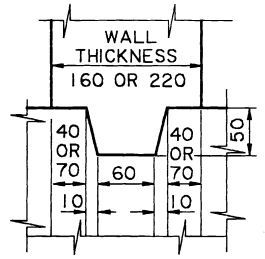

CONSTRUCTION JOINT DETAIL

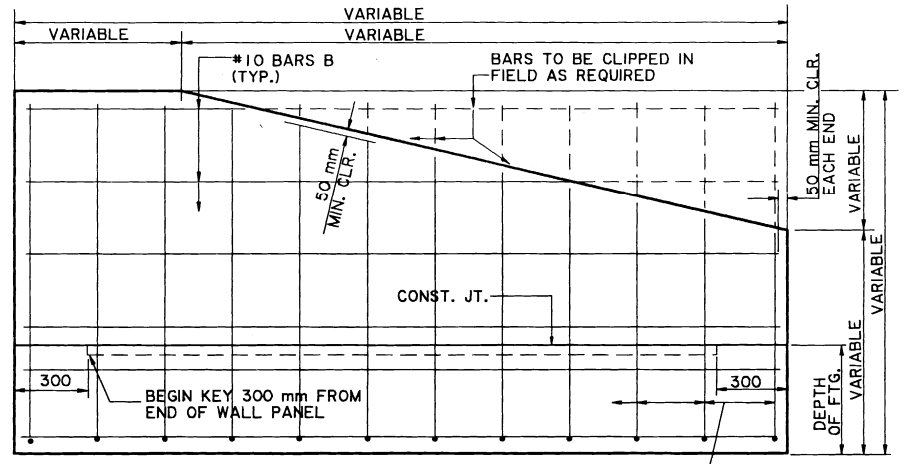

BARS C, D, AND SHEAR KEY NOT SHOWN FOR CLARITY

TYPICAL ELEVATION

(SHOWING REINFORCEMENT DETAILS)

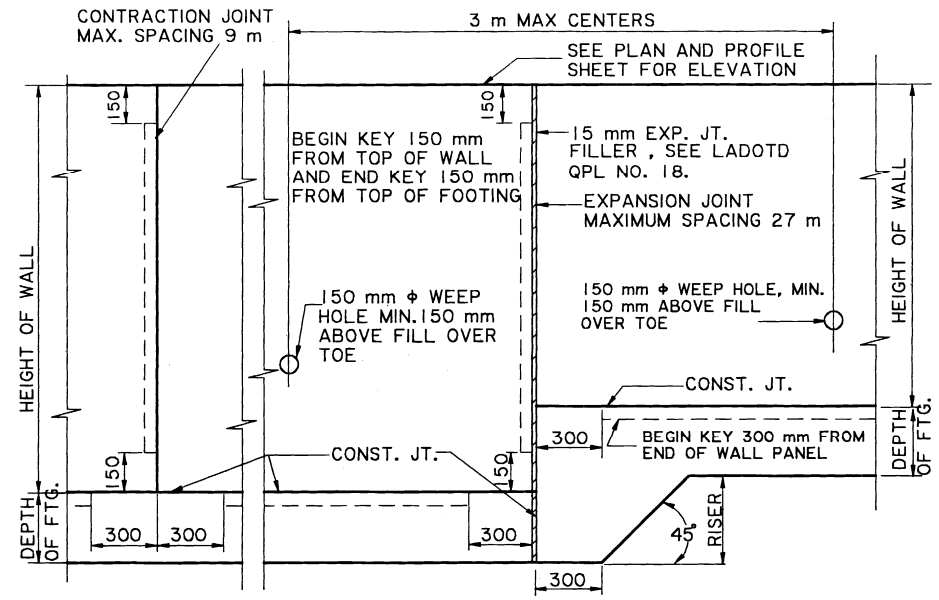

PART ELEVATION OF RETAINING WALL

(SHOWING RISER UNDER FOOTING)

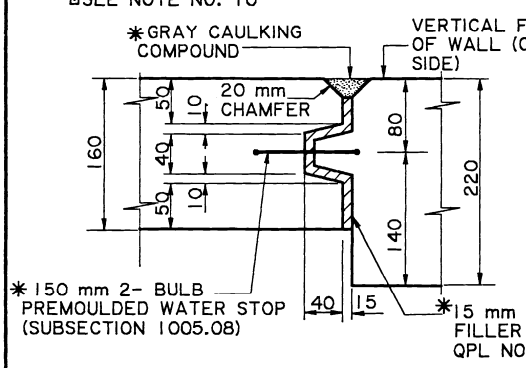

EXPANSION JOINT DETAIL

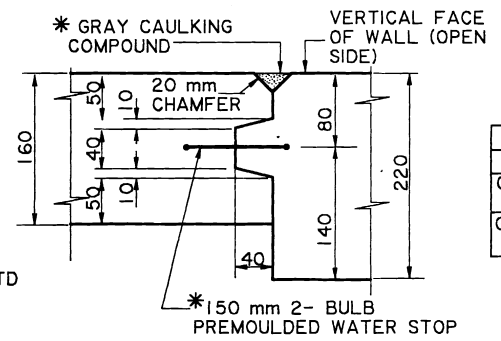

CONTRACTION JOINT DETAIL

QUANTITIES PER LINEAR METER OF WALL							
WALL TYPE	L0.6	L0.9	L1.2	L1.5	T1.2	T1.5	T1.8
CLASS A CONCRETE (m^3)	0.27	0.37	0.50	0.78	0.49	0.77	0.92
GRADE 400 STEEL (kg)	11	16	23	35	28	46	53

REBAR DIMENSIONS (mm)								
WALL	BAR A				BAR C		BAR D	
TYPE	SIZE	a	b	LENGTH	SIZE	LENGTH	SIZE	LENGTH
L0.6	15	725	565	1 290				
L0.9	15	1 025	775	1 800				
L1.2	15	1 325	985	2 310	10	700		
L1.5	15	1 675	1 255	2 930	10	1 850		
T1.2	15	1 325	625	1 950	10	700	15	990
T1.5	15	1 675	915	2 590	10	1 850	15	1 250
T1.8	15	1 975	1 145	3 120	10	2 150	15	1 510

BAR A

NOTES:
BARS B,C, & D ARE STRAIGHT
BAR B LENGTH = WALL LENGTH MINUS 100 mm

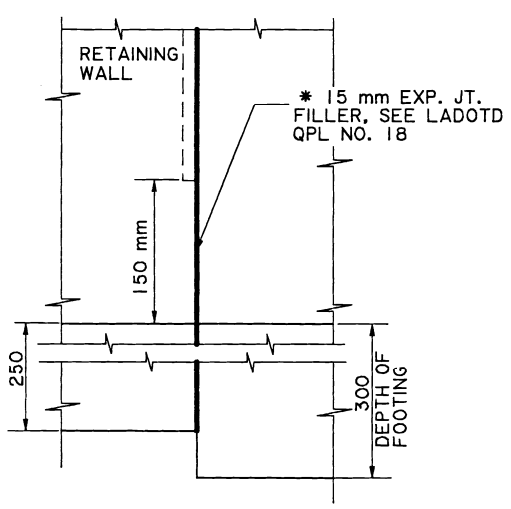

FOOTING EXPANSION JOINT DETAIL

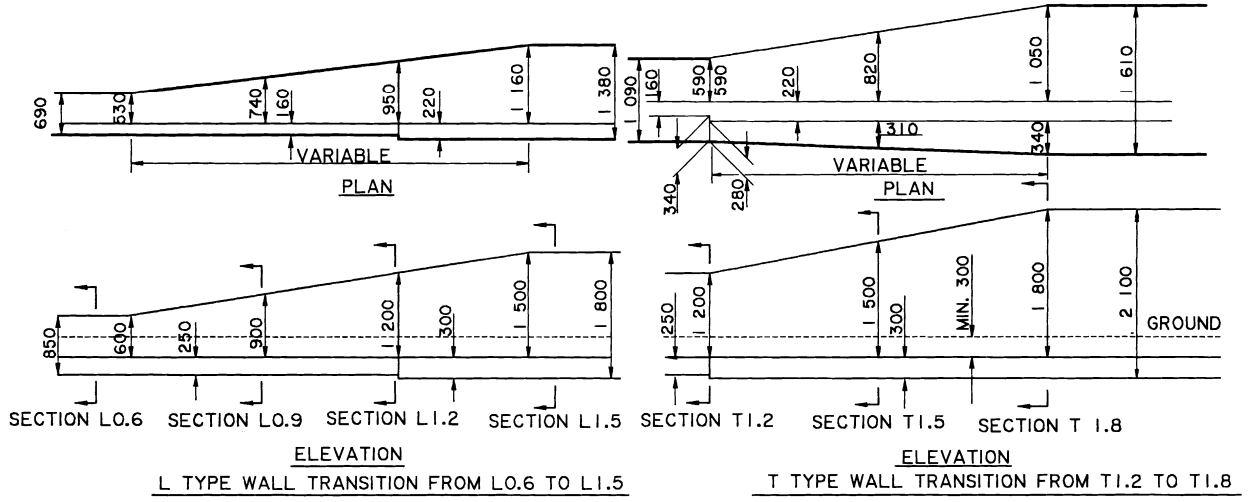

SLOPING RETAINING WALL

NOTES:

1. CONSTRUCTION SPECIFICATIONS: LOUISIANA STANDARD SPECIFICATIONS FOR ROADS AND BRIDGES, 1992 EDITION AND LATEST AMENDED SPECIFICATIONS.
2. DESIGN SPECIFICATIONS: A.A.S.H.T.O., FIFTEENTH EDITION 1992 AND LATEST AMENDED SPECIFICATIONS.
3. ALL CONCRETE SHALL BE CLASS A., CHAMFER ALL EXPOSED CORNERS 20 mm.
4. REINFORCING BARS SHALL BE GRADE 400 (ASTM A615M), DIMENSIONS RELATING TO REINFORCING STEEL SPACING ARE TO BAR CENTERS. SUBSTITUTION OF NEXT LARGER SIZE ENGLISH REINFORCING BARS AT SAME SPACING SHALL BE PERMITTED AT NO ADDITIONAL COST.
5. MAXIMUM ALLOWABLE SOIL PRESSURE: 48 kPa.
6. BACKFILL SHALL BE GRANULAR MATERIAL (SUBSECTION 1003.07) WITH A MAXIMUM SLOPE OF 3 TO 1 (SLOPE ANGLE < 18.5 DEGREES) AND COMPACTED IN ACCORDANCE WITH SUBSECTION 802.9.
7. ALL DIMENSIONS ARE GIVEN IN MILLIMETERS, UNLESS OTHERWISE NOTED.
8. MAXIMUM SPACING OF EXPANSION JOINT IS 27 m.
9. MAXIMUM SPACING OF CONTRACTION JOINT IS 9 m.
10. BACKFILL MATERIALS TO BE INCIDENTAL TO ITEM 802(01) IN CUT SECTION, AND TO BE PAID AS EMBANKMENT ITEM 203(04) IN FILL SECTION.

SHEET NUMBER

PARISH | FEDERAL PROJECT | STATE PROJECT

MISC. RETAINING WALL DETAILS
T & L TYPES 0.6 m THROUGH 1.8 m HEIGHTS

STANDARD PLAN | RW.-01 (M)

BRIDGE AND STRUCTURAL DESIGN

DESIGNED T. LE
CHECKED C. GUIDRY
DETAILED G. GRASS
CHECKED C. GUIDRY
DATE JAN., 1996
SHEET

T.W.A.
APPROVED

DATE	REVISION DESCRIPTION	BY
4-15-96	RENAME CM. 188M TO RW-01M	

DATE: 6-1-98 APPROVED: CHIEF ENGINEER Original Signed By Chief Engineer