NOTE: MINIMUM CONCRETE COVER SHALL BE 3" FOR THE RETAINING SIDE OF THE WALL AND FOR THE FOOTING, AND 2" FOR THE OPEN SIDE OF THE WALL.

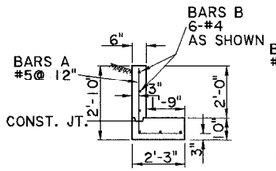

TYPE L2

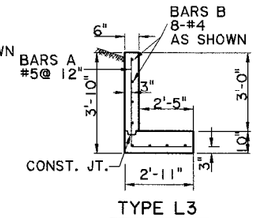

TYPE L3

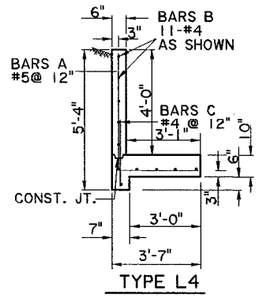

TYPE L4

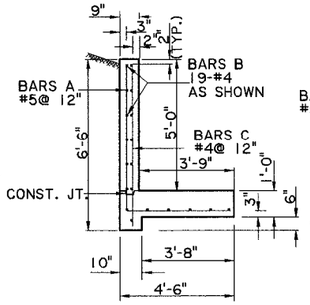

TYPE L5

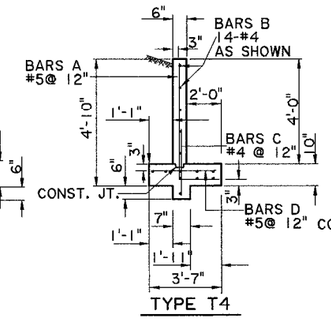

TYPE T4

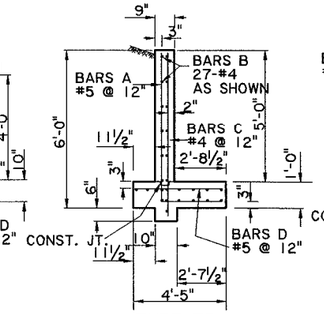

TYPE T5

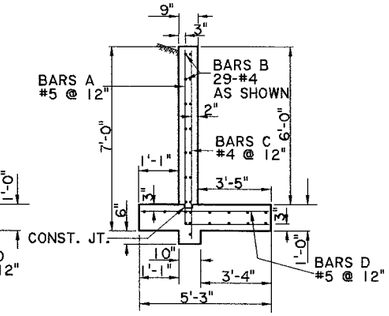

TYPE T6

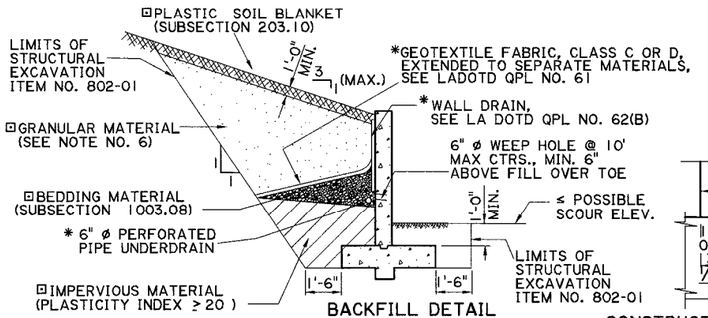

BACKFILL DETAIL

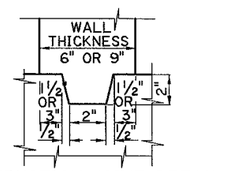

CONSTRUCTION JOINT DETAIL

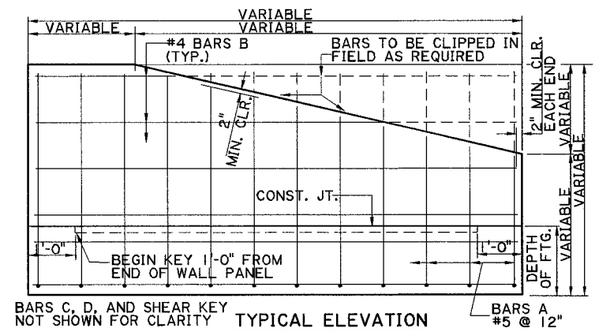

TYPICAL ELEVATION

(SHOWING REINFORCEMENT DETAILS)

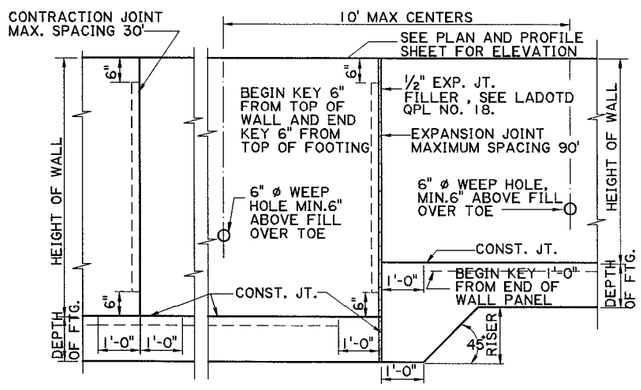

PART ELEVATION OF RETAINING WALL

(SHOWING RISER UNDER FOOTING)

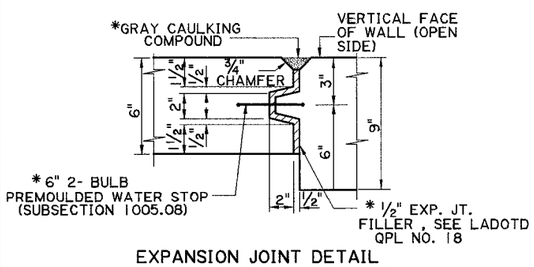

EXPANSION JOINT DETAIL

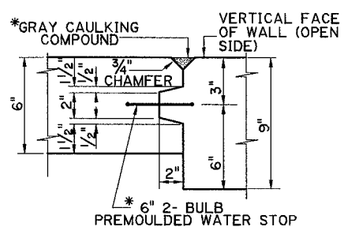

CONSTRUCTION JOINT DETAIL

QUANTITIES PER LINEAR FOOT OF WALL							
WALL TYPE	L2	L3	L4	L5	T4	T5	T6
CLASS "A" CONCRETE (CU. YDS.)	0.106	0.146	0.195	0.321	0.195	0.318	0.376
GRADE 60 STEEL (LBS.)	8.4	11.5	16.8	26.9	21.1	35.4	40.1

REBAR DIMENSIONS								
WALL TYPE	BAR A				BAR C		BAR D	
	SIZE	a	b	LENGTH	SIZE	LENGTH	SIZE	LENGTH
L2	#5	2'-5"	1'-10"	4'-3"				
L3	#5	3'-5"	2'-6"	5'-11"				
L4	#5	4'-5"	3'-2"	7'-7"	#4	2'-4"		
L5	#5	5'-7"	4'-1"	9'-8"	#4	6'-2"		
T4	#5	4'-5"	2'-1"	6'-6"	#4	2'-4"	#5	3'-3"
T5	#5	5'-7"	3'-0"	8'-7"	#4	6'-2"	#5	4'-1"
T6	#5	6'-7"	3'-9"	10'-4"	#4	7'-2"	#5	4'-11"

BAR A

NOTES:
BARS B,C,& D ARE STRAIGHT
BAR B LENGTH = WALL LENGTH MINUS 4"

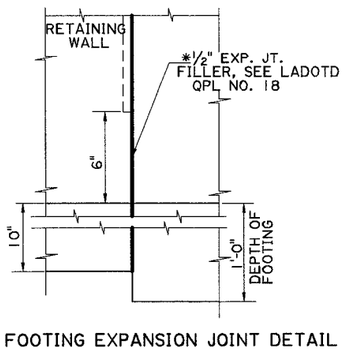

FOOTING EXPANSION JOINT DETAIL

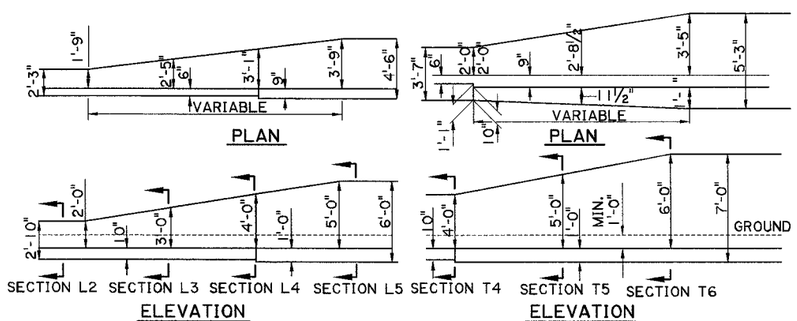

"L" TYPE WALL TRANSITION FROM L2 TO L5

"T" TYPE WALL TRANSITION FROM T4 TO T6

SLOPING RETAINING WALL

NOTES:
1. CONSTRUCTION SPECIFICATIONS: LOUISIANA STANDARD SPECIFICATIONS FOR ROADS AND BRIDGES, 2000 EDITION AND LATEST AMENDED SPECIFICATIONS.
2. DESIGN SPECIFICATIONS: AASHTO, SIXTEENTH EDITION 1996 AND LATEST AMENDED INTERIM SPECIFICATIONS.
3. ALL CONCRETE SHALL BE CLASS "A"., CHAMFER ALL EXPOSED CORNERS 3/4".
4. REINFORCING BARS SHALL BE GRADE 60. DIMENSIONS RELATING TO REINFORCING STEEL SPACING ARE TO BAR CENTERS.
5. MAXIMUM ALLOWABLE SOIL PRESSURE: 1000 PSF.
6. BACKFILL SHALL BE GRANULAR MATERIAL (SUBSECTION 1003.07) WITH A MAXIMUM SLOPE OF 3 TO 1 (SLOPE ANGLE LESS THAN 18.5 DEGREES) AND COMPACTED IN ACCORDANCE WITH SUBSECTION 802.09.
7. MAXIMUM SPACING OF EXPANSION JOINT IS 90 FT..
8. MAXIMUM SPACING OF CONSTRUCTION JOINT IS 30. FT.
⊡ 9. BACKFILL MATERIAL TO BE INCIDENTAL TO ITEM 802-01 IN CUT SECTION, AND TO BE PAID AS EMBANKMENT ITEM 203-04 IN FILL SECTION
*10. NO DIRECT PAY.

SHEET NUMBER

PARISH | FEDERAL PROJECT | STATE PROJECT

DESIGNED T. LE
CHECKED P. FOSSIER
DETAILED G. GRASS
CHECKED T. LE
DATE MAY, 2001
SHEET

DATE | REVISION DESCRIPTION | BY | APPROVED

APPROVED BY CHIEF ENGINEER: Original Signed by Chief Engineer DATE: 6/4/01

MISC. RETAINING WALL DETAILS
T & L TYPES
2'-0" THROUGH 6'-0" HEIGHTS

STANDARD PLAN RW-01

BRIDGE AND STRUCTURAL DESIGN